**Math 120, Sections A and B, Fall 2015, Midterm I**

**October 22, 2015**

**Name** Solutions - V1

**TA/Section**

## Instructions.

- There are 4 questions. The exam is out of 50 points.
- You are allowed to use one page of notes written only on one side of the sheet in your own handwriting. Hand in you note sheet with your exam.
- You can use a TI 30X-IIS calculator. Put away all other electronic devices.
- **Show your work**. If I cannot read or follow your work, I cannot grade it. You may not get full credit for a right answer if your answer is not justified by your work. If you continue at the back of a page, make a note for me.
- You are expected to give an exact answer to all of the questions. The numbers $\frac{1}{3}$, $1+\sqrt{2}$, $\pi$ are exact. The numbers 0.3333333, 2.414, and 3.1416 are decimal approximations for them. A decimal does not have to be an approximation. For example, $\frac{1}{4} = 0.25$ or $\frac{12}{10} = 1.2$. In that case, using one or the other is your preference. [redacted]

| Question | points |
|---|---|
| 1 | |
| 2 | |
| 3 | |
| 4 | |
| Total | |

1. (12 points) A sheet of metal is in the shape shown below. Let $x$ be the width of the shaded area. The picture is not to scale.

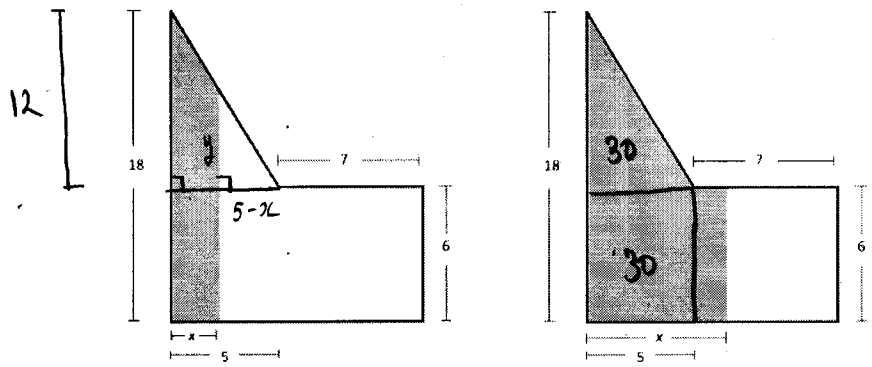


Write down a multi-part function $A(x)$ giving the shaded area as a function of $x$. Note that there are two possible area shapes depending on the value of $x$, shown by the two pictures above.

Similar Triangles: $\frac{12}{y} = \frac{5}{5-x}$ so $y = \frac{12(5-x)}{5} = 12 - 2.4x$

when $0 \le x \le 5$ (picture on left)

$$A(x) = 6x + 30 - \frac{y(5-x)}{2} = 6x + 30 - \frac{12(5-x)^2}{10}$$

when $5 < x \le 12$ (picture on right)

$$A(x) = 30 + 30 + (x-5)6 = 6x + 30$$

$$A(x) = \begin{cases} 6x + 30 - \frac{12}{10}(5-x)^2, & 0 \le x \le 5 \\ 6x + 30, & 5 < x \le 12. \end{cases}$$

2. Daphne starts running at 25 meters North of the laurel tree towards Helen who is standing at 85 meters East and 120 meters North of the laurel tree. Running at constant speed, Daphne reaches Helen in 12 seconds. At the same time when Daphne starts running, Apollo starts running from a point 55 meters North of Daphne and heads straight for Cupid who is standing 60 meters East of the laurel tree, also running at constant speed. Apollo crosses Daphne's path exactly two seconds after she has passed the same spot - so they do not run into each other.

(a) (4 points) Impose a coordinate system with the laurel tree as the origin and find parametric equations for Daphne's motion. Below is where they are at $t = 0$ and their paths to get you started. The picture is not to scale.

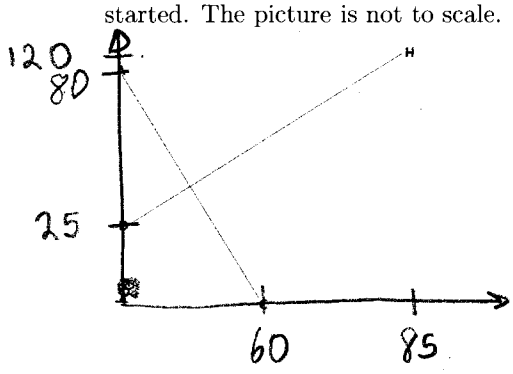


$x_D = a + bt$ $\quad$ $y_D = c + dt$

$0 = x_D(0) = a$ $\quad$ $25 = y_D(0) = c$

$85 = x_D(12) = 12b$ $\quad$ $120 = y_D(12) = 25 + 12d$

$\frac{85}{12} = b$ $\quad$ $\frac{95}{12} = d$

$x_D = \frac{85}{12}t$ $\quad$ $y_D = 25 + \frac{95}{12}t$

(b) (6 points) Find the point where their paths intersect.

Daphne's path: $m = \frac{120-25}{85} = \frac{95}{85} = \frac{19}{17}$ so $y = \frac{19}{17}x + 25$

Apollo's path: $m = \frac{-80}{60} = -\frac{4}{3}$ so $y = -\frac{4}{3}x + 80$

Point of intersection: $\frac{19}{17}x + 25 = -\frac{4}{3}x + 80$ $\quad$ $y = -\frac{4}{3}\left(\frac{561}{25}\right) + 80$

$\frac{125}{51} = \frac{57+68}{51} = \left(\frac{19}{17} + \frac{4}{3}\right)x = 55$ $\quad$ $= 50.08$

$x = \frac{(55)(51)}{125} = \frac{561}{25} = 22.44$

(c) (4 points) Find parametric equations for Apollo's motion.

$x_A = a + bt$ $\quad$ $y_A = c + dt$

$0 = x_A(0) = a$ $\quad$ $80 = y_A(0) = c$

Daphne is at $(22.44, 50.08)$ when $22.44 = \frac{85}{12}t$

$t = 3.168$

so Apollo is there at $t = 5.168$.

$50.08 = 80 + 5.168d$

$22.44 = 5.168b$

$y_A = 80 - \frac{29920}{5168}t$

$x_A = \frac{22440}{5168}t$

3. David is standing on a downhill street with a 15% incline, i. e. it goes down vertically 15 meters for every 100 meter horizontal distance. He kicks the ball up in the air so that the ball follows the path of the graph of

$$y = -0.2x^2 + 4x$$

where both $x$ and $y$ are in meters.

(a) (1 point) Sketch the path of the ball on the picture below.

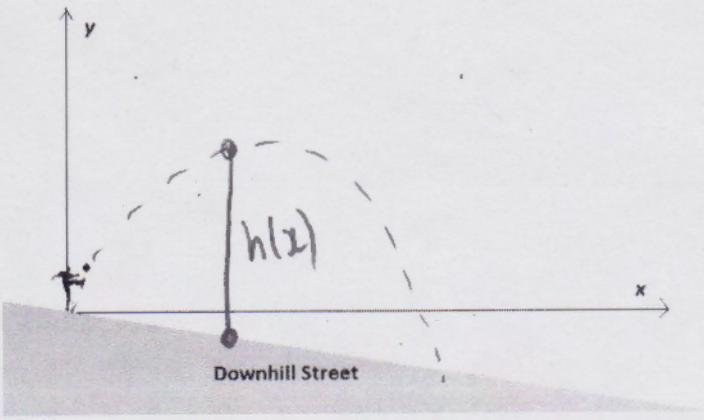


(b) (5 points) Where does the ball hit the street? Give your answer in the form $(x, y)$.

Street equation: $y = -\frac{15}{100}x = -0.15x$

Ball hits street when $-0.2x^2 + 4x = -0.15x$

OR $-0.2x^2 + 4.15x = 0$

$x(-0.2x + 4.15) = 0$

$x = 0$ (when David kicks)

$x = \frac{4.15}{0.2} = 20.75$ (when the ball hits the street)

and $y = -0.15x = -3.1125$ so $\boxed{(20.75, -3.1125).}$

(c) (4 points) What is the maximum height of the ball, measured from the ground?

$h(x) = -0.2x^2 + 4x - (-0.15x)$

$= -0.2x^2 + 4.15x$

Its maximum is at $x = \frac{-4.15}{2(-0.2)} = 10.375$

The maximum height is

$h(10.375) = -0.2(10.375)^2 + 4.15(10.375)$

$= 21.528125$ meters.

4. (14 points) I want to go for a swim in the circular lake of radius 2 miles. Initially, I am at 12 miles East and 5 miles North of the center of the lake. First, I run towards the center of the lake so I reach it as soon as possible. Then I go in, swim due West and get out of the lake. If I can run at 11 miles per hour and swim at 3 miles per hour, how long does it take me to run and swim altogether?
Hint: Impose a coordinate system where the origin is at the center of the lake.

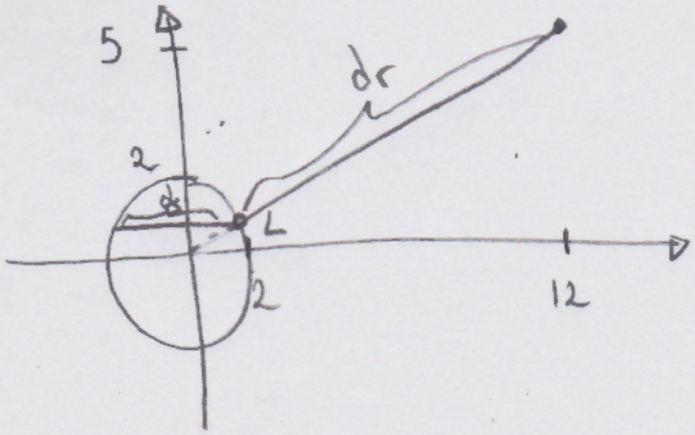


$d_r = \sqrt{5^2+12^2} - 2 = 11$ miles so I run for $\frac{11}{11} = 1$ hour.

to find $d_s$, I need the $x$-coordinate of the point L where the line $y = \frac{5}{12}x$ intersects the circle $x^2+y^2=4$

so $x^2 + \left(\frac{5}{12}x\right)^2 = 4$

$\left(1+\frac{25}{144}\right)x^2 = 4$

$\frac{134}{144}x^2 = 4$ so $x = \sqrt{\frac{4\cdot 144}{134}} = \frac{2\cdot 12}{13} = \frac{24}{13}$

Then, $d_s = 2\cdot\frac{24}{13} = \frac{48}{13}$ miles so I swim for $\frac{48}{13\cdot 3} = \frac{16}{13}$ hrs.

The total time is $1\frac{16}{13} = \frac{29}{13}$ hrs.