Math 324 C - Winter 2012
Final
March 14, 2012

Name: _____

Student ID Number: _____

PAGE 1	10	
PAGE 2	10	
PAGE 3	10	
PAGE 4	10	
PAGE 5	10	
PAGE 6	10	
PAGE 7	10	
Total	70	

- There are 7 questions spanning 7 pages. Make sure your exam contains all these questions.
- You are allowed to use a scientific calculator (**no graphing calculators**) and one **hand-written** 8.5 by 11 inch page of notes.
- You must show your work on all problems. The correct answer with no supporting work may result in no credit. **Put a box around your FINAL ANSWER for each problem and cross out any work that you don't want to be graded.** Give exact answers wherever possible.
- If you need more room, use the backs of the pages and indicate to the grader that you have done so.
- Raise your hand if you have a question.
- Any student found engaging in academic misconduct will receive a score of 0 on this exam.
- You may pick up your graded final during any of my office hours spring quarter.
- You have 110 minutes to complete the exam. Budget your time wisely.
  SPEND NO MORE THAN 15 MINUTES PER PAGE!

GOOD LUCK!

1. (10 pts) Compute the following integrals:

(a) $\int_C (x+1)\,ds$ where C is the line segment from $(1,0)$ to $(-2,4)$.

(b) $\iint_S 15z\,dS$, where S is the surface of the sphere $x^2+y^2+z^2=1$ in the **first octant**.

2. (10 pts) Compute $\iint\limits_S \langle xz, yz, 3z\rangle \cdot d\mathbf{S}$ where S is the part of the cone $z = \sqrt{x^2 + y^2}$ that is between $z = 1$ and $z = 2$ with **downward** orientation.

3. (10 pts) Consider the vector field $\mathbf{F}(x, y, z) = \langle y^2 + 2, 2xy, 3z^2 \rangle$ on $\mathbb{R}^3$. Note that $\operatorname{curl} \mathbf{F} = \mathbf{0}$.
Let C be the curve parameterized by $\mathbf{r}(t) = \langle 5t^{10}, \cos(\pi t), 2t^3 - t - 1 \rangle$ for $0 \leq t \leq 1$.
Compute $\displaystyle\int_C \mathbf{F} \cdot d\mathbf{r}$.
(Please use the consequences of the fact that $\operatorname{curl} \mathbf{F} = \mathbf{0}$).

4. (10 pts) Set up (**DO NOT EVALUATE**) two triple integrals that represent the volume of the solid bounded by the planes $3x + 2y + z = 6$, $z = 0$, $y = 0$, and $x = 1$. You must give two answer in the orders specified.

(a) In the order $dzdydx$:

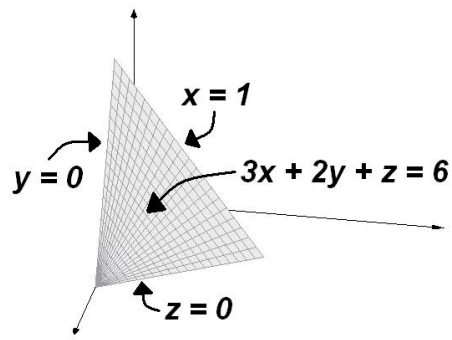

(b) In the order $dxdzdy$:

5. (10 pts) Consider the vector field $\mathbf{F}(x, y, z) = \langle x^4 + 3x, x^3 - \cos(y) \rangle$ on $\mathbf{R}^2$. Let C be the positively oriented **CLOSED** curve that consists of the curve C_1 which is the arc of parabola $y = 1 - x^2$ from $(1, 0)$ to $(-1, 0)$ followed by the curve C_2 which is the line segment from $(-1, 0)$ to $(1, 0)$.

Compute $\displaystyle\int_C \mathbf{F} \cdot d\mathbf{r}$.

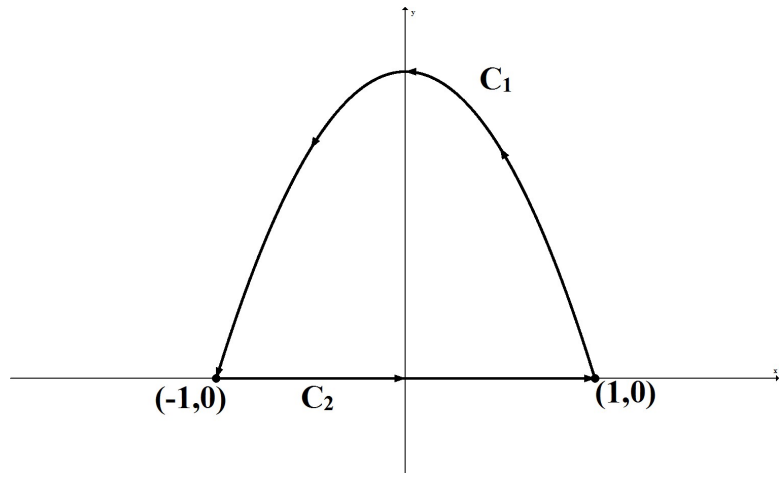

6. (10 pts) You impose a coordinate system on a hot sand beach and find the temperature at each point is given by $T(x, y) = x^2 + y^2 + 4y + 90$ degrees Fahrenheit, where x and y are in feet.

Assume you walk barefoot half way around a circular path, C, from $(3, 0)$ to $(-3, 0)$ in such a way that your motion is parameterized by $\mathbf{r}(t) = \langle 3\cos(t), 3\sin(t)\rangle$ where t is in seconds with $0 \leq t \leq \pi$.

GIVE UNITS FOR ALL YOUR ANSWERS.

(a) Give the direction and magnitude of the greatest rate of change at the point (3,0). (This question has nothing to do with C).

(b) As you walk along the curve C, what is the rate of change of temperature with respect to time at $t = \pi/4$ seconds?

(c) Compute $\dfrac{1}{3\pi}\displaystyle\int_C T(x, y)ds$. (This is the average temperature along C).

7. (10 pts) Consider the vector field $\mathbf{F}(x, y, z) = \langle 1 + 3y^3, -6x, -3z^2 + x \rangle$ on $\mathbb{R}^3$. Let S be the **CLOSED** surface that consists of the cylinder $x^2 + y^2 = 9$ for $0 \leq z \leq 1$ and the parts of the planes $z = 0$ and $z = 1$ that are inside the cylinder. Find the flux of $\mathbf{F}$ across S.

That is, compute $\displaystyle\iint_S \mathbf{F} \cdot d\mathbf{S}$.

You may pick either the outward or inward orientation for S, but in the end I want you to tell me if the net flux of $\mathbf{F}$ across S is outward or inward.

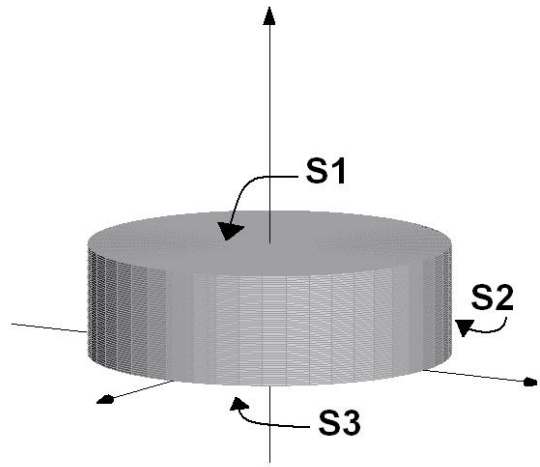

NET FLUX OF $\mathbf{F}$ ACROSS S (circle one): INWARD OR OUTWARD